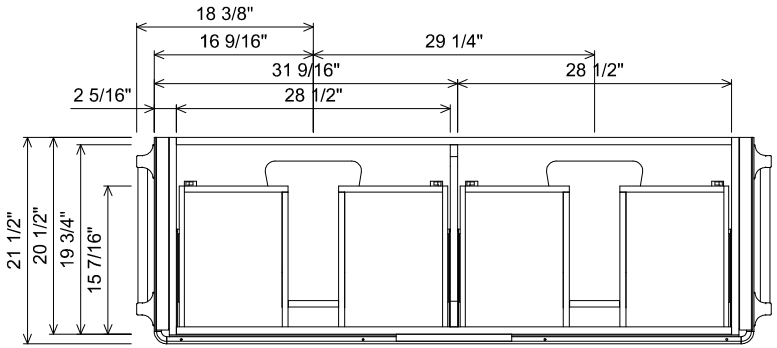

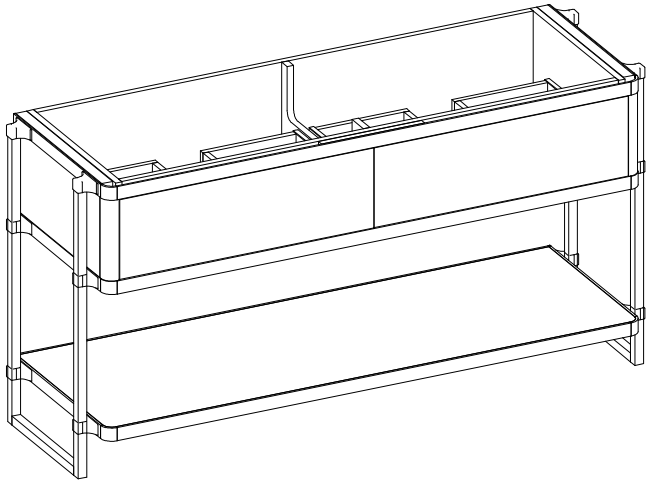

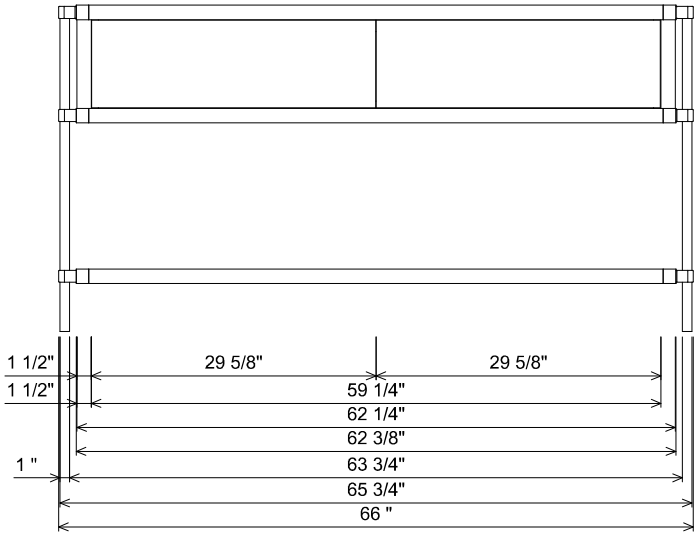

AT SINK CENTER SECTION

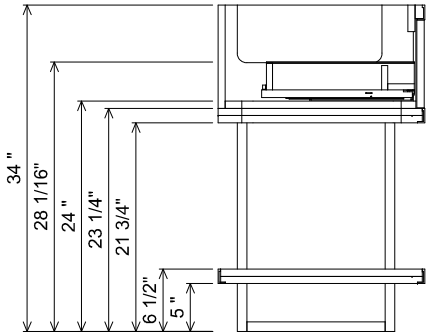

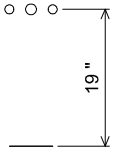

FINISHED FLOOR

PREPARATION INSTRUCTIONS

All vanities require solid blocking in the wall
Plumbing supply and waste to be 19"H above finished floor
Space for undermount sink: 5 3/4"

THE FURNITURE GUILD
ESTD 1984

522-0201-66

LIAM

CURRENT AS OF: 01/23/2026

ALL DRAWINGS AND DIMENSIONS ARE SUBJECT TO CHANGE WITHOUT NOTICE AT THE DISCRETION OF THE MANUFACTURER. THE MANUFACTURER RESERVES THE RIGHT TO MAKE ADDITIONS, DELETIONS, AND MODIFICATIONS TO THE DRAWINGS AS THE MANUFACTURER MAY DEEM APPROPRIATE OR DESIRABLE. DIMENSIONS ARE APPROXIMATE AND MAY VARY WITH ACTUAL CONSTRUCTION. PLEASE CONTACT THE FURNITURE GUILD, INC. TO ENSURE DRAWING IS UP TO DATE.

THE INFORMATION CONTAINED IN THIS DRAWING IS THE SOLE PROPERTY OF THE FURNITURE GUILD, INC. ANY REPRODUCTION IN PART OR AS A WHOLE WITHOUT WRITTEN PERMISSION OF THE FURNITURE GUILD, INC. IS PROHIBITED.